MASTER
M

SERVICE MANUAL
& PARTS LIST

ELECTRONIC KEYBOARD

SK-2

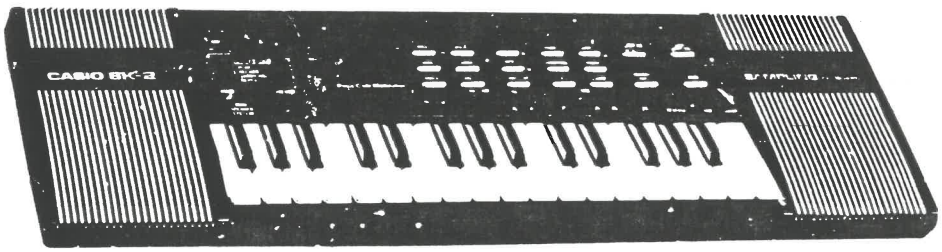

SK-2

CASIO

A1

20 ALL

CONTENTS

		Fiche	Cell
1.	SCHEMATIC DIAGRAM	1	A4
	1-1 Main PCB M3128-MA1M	1	A4
	1-2 Console PCB M3128	2	A6
	1-3 Keyboard PCB M3129-KY1M	3	A8
2.	KEY MATRIX	4	A9
3.	BLOCK DIAGRAM	5	A10
4.	CPU (MSM6283-07GS)	6	A11
5.	PITCH/ENVELOPE MIXING CIRCUIT	8	A13
6.	SAMPLING CIRCUIT	9	A14
7.	ROM & RAM ACCESSES	10	B1
8.	RESET CIRCUIT	11	B2
9.	POWER CIRCUIT	12	B3
10.	TROUBLESHOOTING	13	B4
	PARTS LIST	14	B5

Oversized Schematic Diagram M3128-MA1M.....C13

2. KEY MATRIX

KI8	KI7	KI6	KI5	KI4	KI3	KI2	KI1	
G1#	G1	F1#	F1					KO0
C2	B1	A1#	A1	FLUTE	TRUMPET	VIBRA-PHONE	PIANO	KO1
E2	D2#	D2	C2#			SAMPLE	CLARINET	KO2
G2#	G2	F2#	F2					KO3
C3	B2	A#2	A2	SAMPLING EFFECT		MEMORY START	START/ STOP	KO4
E3	D3#	D3	C3#			DEMO	SAMPLING	KO5
G3#	G3	F3#	F3	SAMBA	SWING	DISCO	ROCK	KO6
C4	B3	A3#	A3			WALTZ	MARCH	KO7
								KO8
POWER OFF				SAMPLING REPEAT		REC	POWER ON	KO9
		TEMPO ▲	TEMPO ▼					KO10

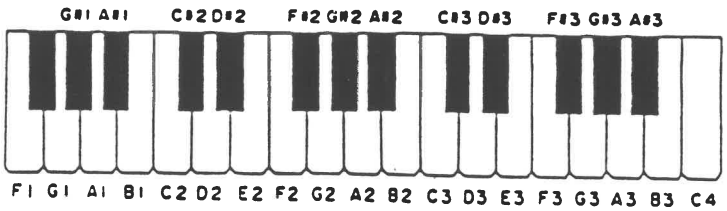

3. BLOCK DIAGRAM

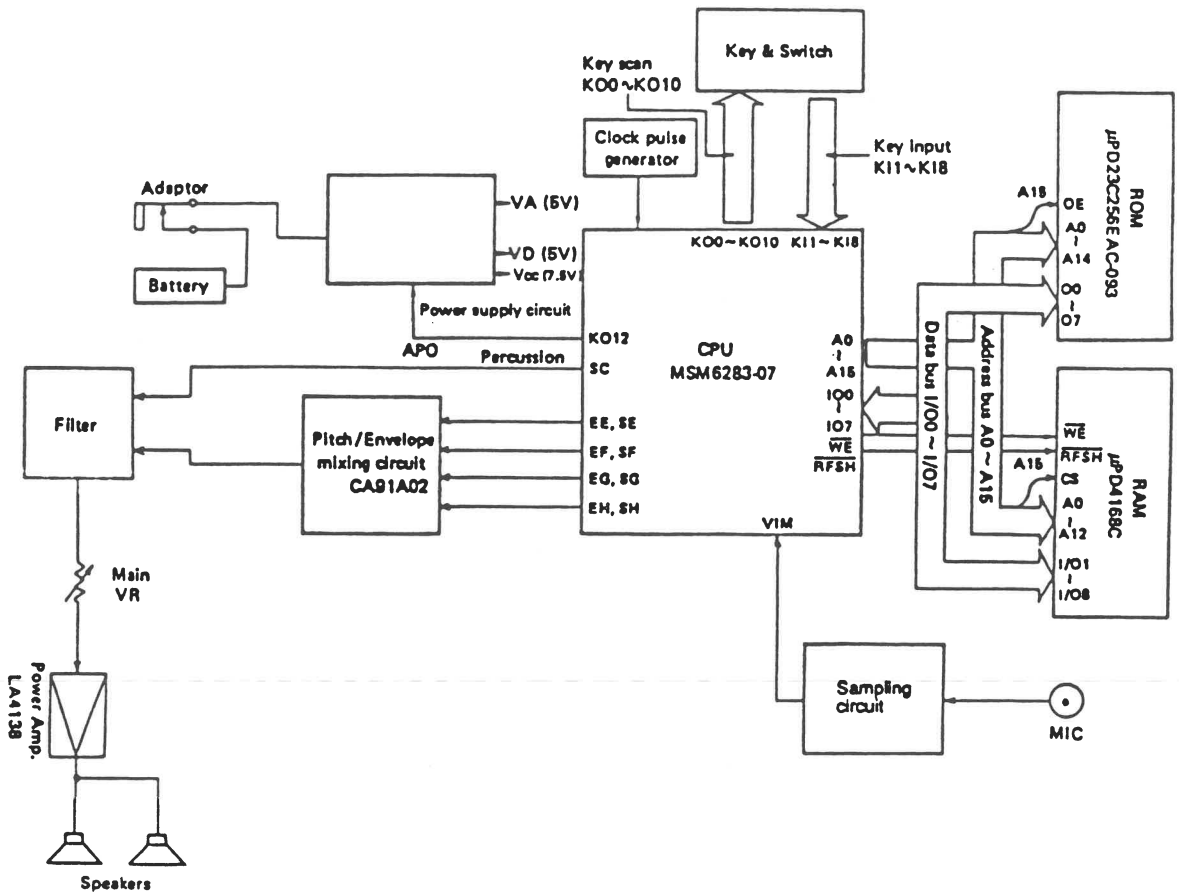

4. CPU (MSM6283-07GS)

- Generates pitch and envelope signals for melody, chord,bass, and obbligato sounds.
- Provides percussio sounds.
- Controls keys, switches, RAM, and ROM.

The following lists the pin functions of the CPU.
As the LSI works in negative logic, GND is +5 V whereas power source is 0 V.

Pin No.	Terminal Name	In/Out	Function
1	BGND		+5 V source for ADC (Analog to Digital Converter)
2	VADC		Ground (0V) source for internal ADC
3,4			Not used
5~ 11	IO0~ IO6	In/Out	Data bus (IO0~ IO6)
12	A0	Out	Address bus (A0)
13	IO7	In/Out	Data bus (IO7)
14	A1	Out	Address bus (A1)
15	$\overline{CE}$	Out	Chip enable signal for memory devices. Low active
16~ 18	A2, A10, A3	Out	Address bus (A2, A3, A10)
19	$\overline{OE}$	Out	Output enable signal for RAM. Low active
20~ 30	A4~ 9, A11~ 15	Out	Address bus (A4~ 9, A11~ A15)
31	$\overline{WE}$	Out	Write Enable signal. CPU writes data into memory devices when "Low"
32	$\overline{RFSH}$	Out	Refresh signal output CPU refreshes RAM memory data when "Low"
33~ 39			No function
40	GND		+5 V source
41.42			No function
43	VDD1		0V source
44~ 56			No function
57,58	OSI, OSO	In/Out	7.277088 MHz clock pulse input and output
59	MI	In	Not used
60	RESET	In	Reset signal input Terminal receives "High" level pulse initializing CPU internal circuits at power ON
61~ 63			No function
64	KO12	Out	APO (Auto Power Off) signal output Terminal rises to High level to shut voltages off when the unit is not operated for approximately 7 minutes.
65			No function
66~ 76	KO10~ KO0	Out	Key and switch common signals outputs
77~ 84	K11~ K18	In	Key and switch input signals
85~ 88			No function
89~ 92	EH~ EE (4~ 1 ch)	Out	Melody envelope signals outputs
93~ 96	SH~ SE (4~ 1 ch)	Out	Melody pitch signals outputs

Pin No.	Terminal Name	In/Out	Function
97	SC	Out	Percussion signal output
98	AGND		+5V source for DAC (Digital to Analog Converter)
99	VDAC		0V source for DAC
100	Vin	In	Sampling sound signal input from built-in MIC

CPU, RAM and ROM control time chart

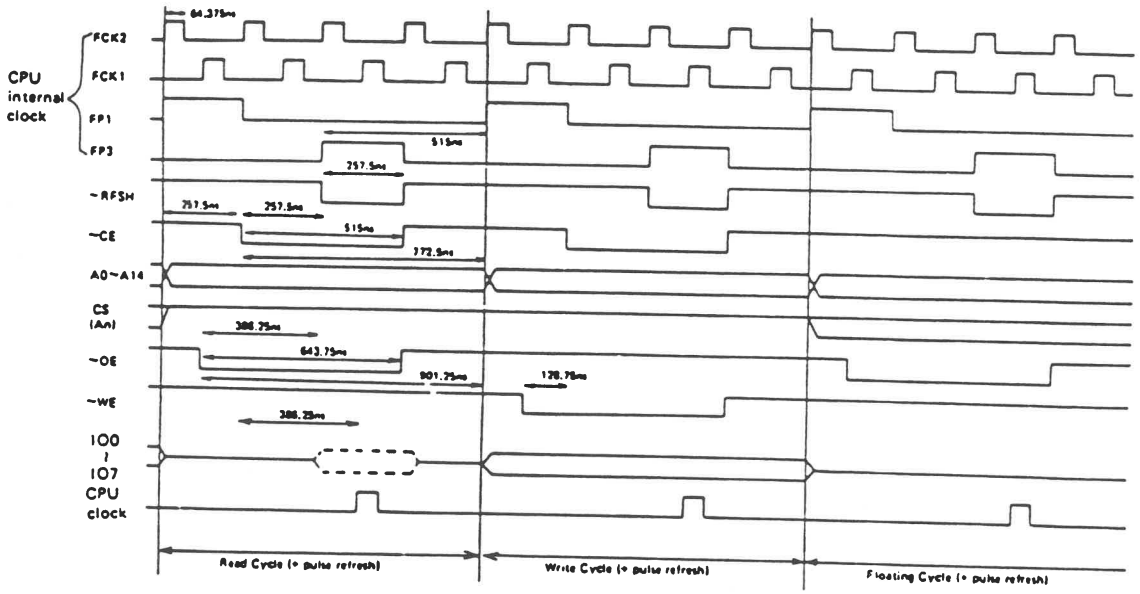

A12

5. PITCH/ENVELOPE MIXING CIRCUIT

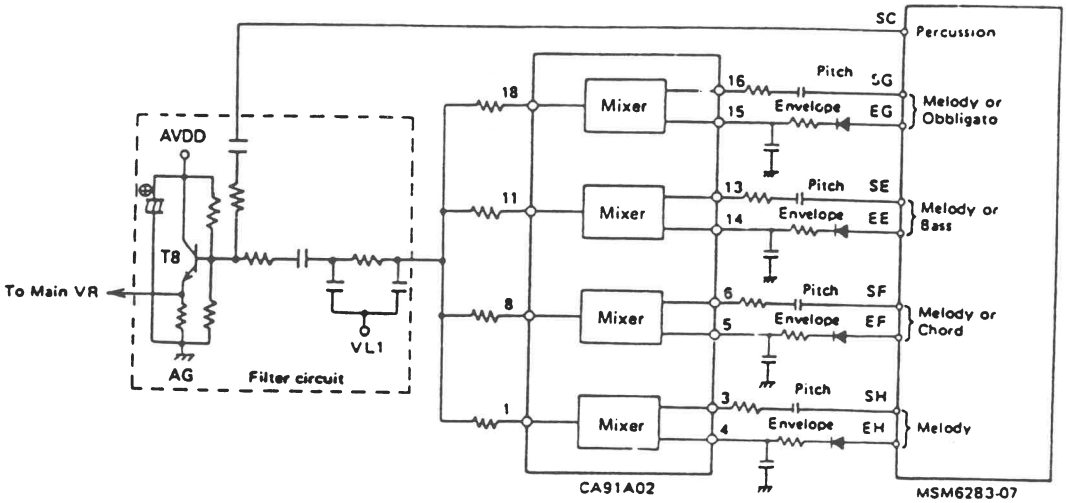

CPU outputs four each of pitch and envelope signals.
Normally all the signals are for melody sounds however, when the demonstration music is played, each pitch and envelope signals become obbligato, bass, chord, or melody sounds.
CA91A02 contains four mixers and merges each pitch and envelope signals.

6. SAMPLING CIRCUIT

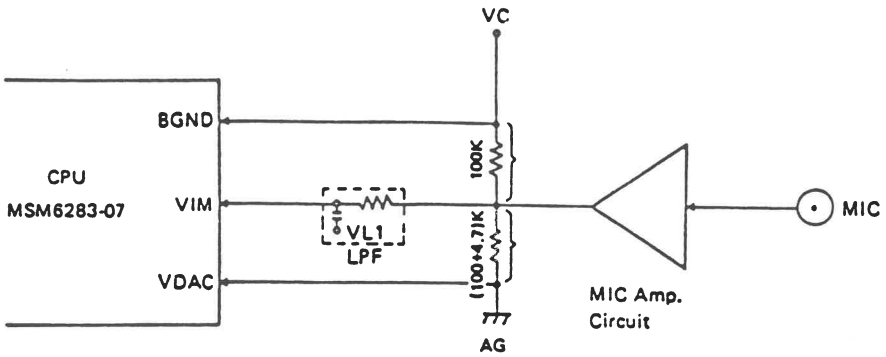

Fig. 1 Sample Sound Input Circuit

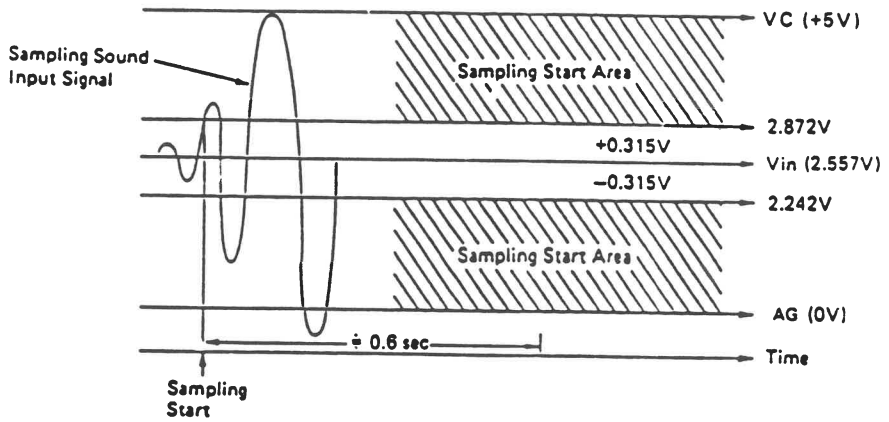

Fig. 2 VIM Input Trigger Level

As shown in Fig. 1, the circuit provides sampling signals to the VIM terminal of the CPU.
Resistors 100 K ohm and (100 + 4.7) K ohm bias the sampling signal on 2.557 V.
When the sampling sound level exceeds ± 0.315 V as shown in Fig. 2, the CPU starts to transmit the sampling sound data to the RAMs.
While sampling, the CPU transmits the sampling sound data to the sampling RAMs directly.
While sampling, CPU does not output key common signals (KO0~ KO10) so that the keyboard becomes inoperative.
Sampled sounds are digitized in CPU and transmitted to the RAM.

7. ROM & RAM ACCESSES

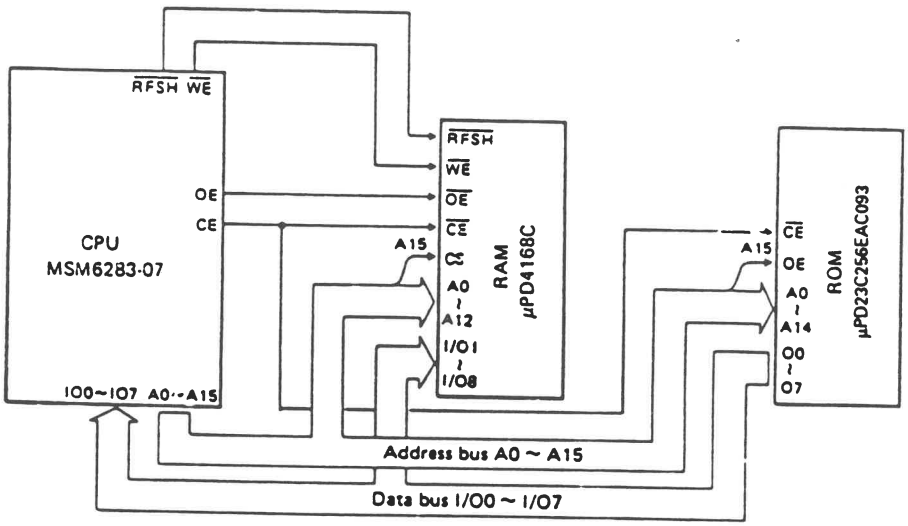

The RAM is 64 Kbit dynamic RAM. Since they are dynamic type, data must be refreshed every 2 milliseconds at least. The memory is used as the demonstration, memory play and sampling data area.

The capacity of ROM is 256 Kbit and it contains the program for system execusion and the preset tone data.

The chip select conditions are as shown below.

Chip \ Signal	A15	$\overline{CE}$	$\overline{OE}$	$\overline{WE}$
RAM	L	L	L	L
ROM	H	L	X	X

H : High level
L : Low level
X : Irrelevant

8. RESET CIRCUIT

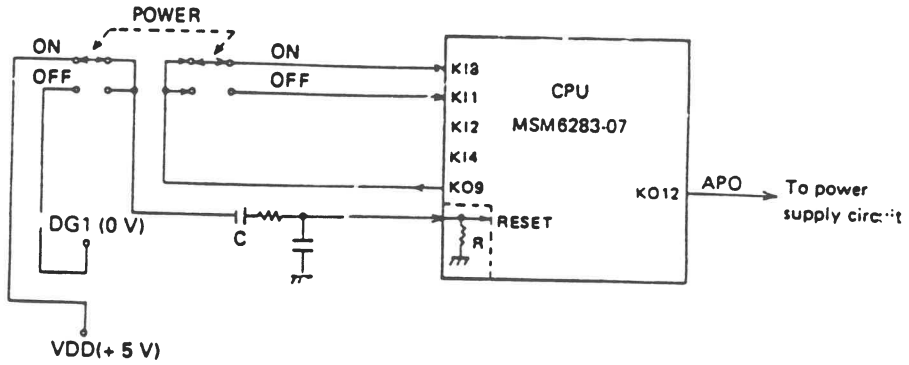

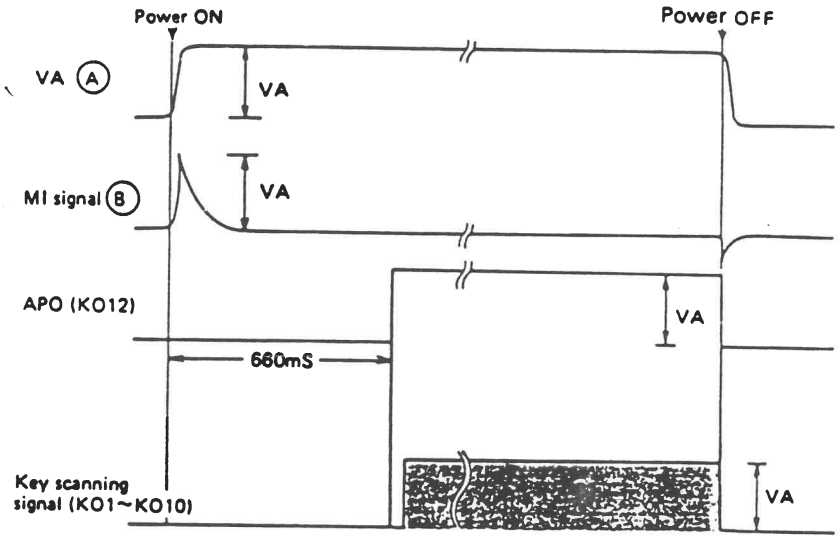

At power ON, the CPU receives RESET signal as shown in the time chart by a differential circuit of capacitor C and resistor R. Then the CPU outputs APO (KO12) and key scanning signals, and starts controlling of peripheral circuits. Also, the CPU detects power switch OFF by receiving key common signal (KO9) in key input terminal (K18) and stops functioning.

9. POWER CIRCUIT

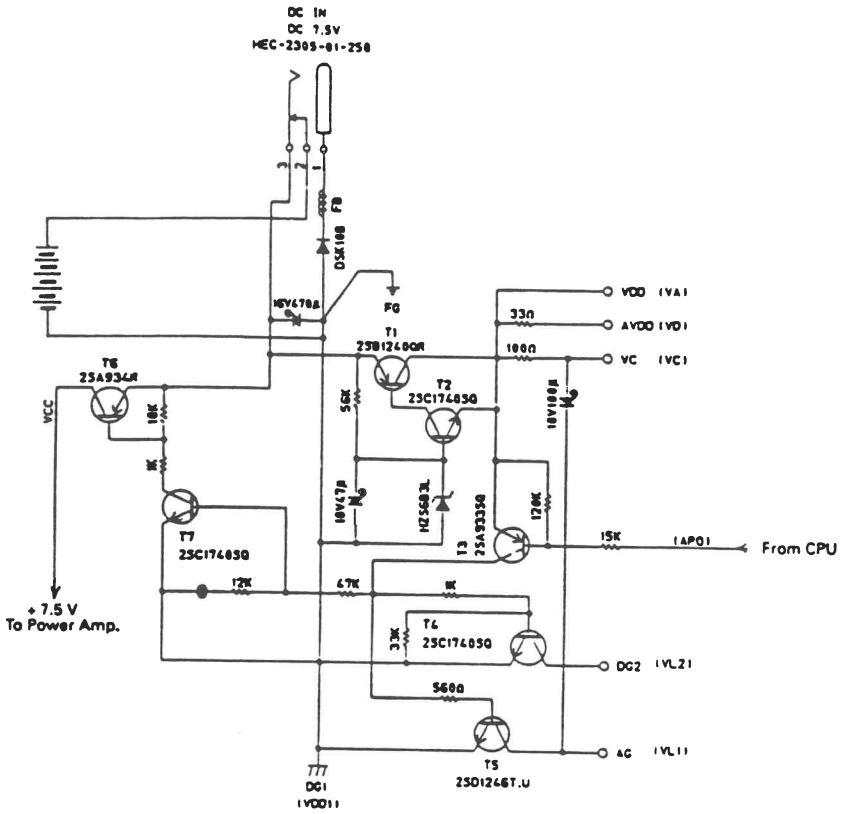

The Power Circuit provides VDD (+ 5 V for digital circuits), AVDD (+ 5 V for linear circuits), VC (+ 5 V for sampling circuits) and, VCC (+7.5 V for Power Amp.)

Transistors T1, T2 and, zener diode HZ6B regulates the power voltage in + 5 V for VDD, AVDD, and VC.

Normally, CPU drops the signal APO Low causing transistors T3 - T7 on. Grounds AG and DG2 and, VCC (+ 7.5 V for Power Amp.) are supplied to the circuits.

When the keyboard is left unoperated for six minutes, signal APO becomes High level. Transistors T3 - T7 are turned off causing VCC, DG2, and, AG shut off.

10. TROUBLESHOOTING

Trouble	Faulty Block	Cause/Treatment
No power	Power supply circuit	Check voltages in accordance with the schematic diagram
	Power switch	Switch contacts and switch spring tension (Check waveform ②)
	CPU	Check waveform ⑩
	Pulse generator	Check waveform ①
No sound at all	Power circuit	Check voltages VH (7.5V), VL1 (0V)
	CPU	Check waveforms ③~⑦
	ROM	
	Mixing Amp.	Check emitter signal of transistor T11
	Power Amp.	Check output signal (pin 2) of Power Amp.
	Speaker	
No merody sound at all (Percussions sound OK)	Pitch/Envelope mixing circuit	Check waveforms ③~⑥
	ROM	
No rhythm sound at all (Merody sound OK)	CPU	Poor soldering of CPU (Check waveform ⑦)
	ROM	
Certain keys or switches do not respond	Dirty contact	Clean PCB CN1M and contact rubbers
	Poor soldering of diodes	Resolder diodes
	Poor contact of PC joiner	Check poor contact PC joiners
	CPU	Check poor soldering of CPU
Sampling impossible	Built-in MIC	
	Sampling circuit	Check collector signals of transistors T28 and T29
	CPU	
	RAM	
Distorted sound	Battery	Check the battery voltage
	Speaker	
	Power Amp.	Check output signal (pin 2) of Power Amp.
	Mixing Amp.	Check emitter signal of transistor T11

PARTS LIST

SK-2

Notes: 1. Prices and specifications are subject to change without prior notice.
2. As for spare parts order and supply, refer to the "GUIDE BOOK for Spare Parts Supply", published separately.
3. The numbers in item column correspond to the same numbers in drawing.

SK-2 Parts List

Item	Code No.	Parts Name	Specification	Q'ty		Unit Price CODE	RANK	
	1. M3128-MA1M PCB ASS'Y							
	20104039	LSI	MSM6283-07GS	1		BB	A	K
	20107182	LSI	UPD23C256EAC-093	1		AT	A	D
	20107189	LSI	UPD4168C-12, 15, 20	1		AQ	A	D
	21140252	Monolithic IC	CA91A02	1		AI	A	C
	21208329	Linear IC	LA4138	1		AG	A	C
	22003739	Transistor	2SA934R-T-103-T	1		AD	A	A
	22500441	Transistor	2SA1267Y-AT-T	1		AB	A	A
	22510140	Transistor	2SB1240Q, R-TV6-T	1		AD	A	A
	22520070	Transistor	2SC1310E-T	3		AD	A	A
	22520252	Transistor	2SC3198Y-AT-T	3		AD	A	A
	22520497	Transistor	2SC3199Y-AT-T	3		AB	A	A
	22530217	Transistor	2SD1246T, U-AA-T	1		AD	A	A
	23002086	Diode	ISS254T-77-T	4		AA	C	A
	23600616	Zener diode	HZS6B3LTD-T	1		AB	B	A
	23900378	Diode	1SR139-100T-32-T	1		AB	C	A
	26060049	Carbon film resistor	R-20-100K-G-T24-T	2		N/A	C	A
	26060315	Carbon film resistor	R-20-3.3-J-T24-T	1		N/A	C	A
	26060483	Carbon film resistor	R-20-4.7K-G-T24-T	1		N/A	C	A
	26170028	Carbon film resistor	R-20-100-J-T24-T	3		N/A	C	A
	26170044	Carbon film resistor	R-20-560-J-T24-T	2		N/A	C	A
	26170052	Carbon film resistor	R-20-1K-J-T24-T	7		N/A	C	A
	26170061	Carbon film resistor	R-20-2.2K-J-T24-T	6		N/A	C	A
	26170095	Carbon film resistor	R-20-10K-J-T24-T	15		N/A	C	A
	26170109	Carbon film resistor	R-20-33K-J-T24-T	1		N/A	C	A
	26170117	Carbon film resistor	R-20-47K-J-T24-T	1		N/A	C	A
	26170125	Carbon film resistor	R-20-68K-J-T24-T	5		N/A	C	A
	26170141	Carbon film resistor	R-20-100K-J-T24-T	9		N/A	C	A
	26170203	Carbon film resistor	R-20-470K-J-T24-T	1		N/A	C	A
	26170206	Carbon film resistor	R-20-39K-J-T24-T	1		N/A	C	A
	26170246	Carbon film resistor	R-20-12K-J-T24-T	1		N/A	C	A
	26170262	Carbon film resistor	R-20-120K-J-T24-T	1		N/A	C	A
	26170289	Carbon film resistor	R-20-15K-J-T24-T	1		N/A	C	A
	26170301	Carbon film resistor	R-20-56K-J-T24-T	5		N/A	C	A
	26170319	Carbon film resistor	R-20-560K-J-T24-T	1		N/A	C	A

Notes: ☆ — New parts
Q'ty — Quantity used per unit

Rank A: Essential
B: Stock recommended
C: Others
X: No stock recommended

SK-2 Parts List

Item	Code No.	Parts Name	Specification	Q'ty		Price Code	RANK	
	26170343	Carbon film resistor	R-20-390K-J-T24-T	1		N/A	C	A
	26170378	Carbon film resistor	R-20-3.9K-J-T24-T	1		N/A	C	A
	26170394	Carbon film resistor	R-20-680K-J-T24-T	1		N/A	C	A
	26170467	Carbon film resistor	R-20-68-J-T24-T	2		N/A	C	A
	26170505	Carbon film resistor	R-20-33-J-T24-T	1		N/A	C	A
	26170877	Carbon film resistor	R-20-8.2K-J-T24-T	1		N/A	C	A
	28017994	Electrolytic capacitor	16RE3-470-T14-T	1		N/A	C	A
	28070993	Electrolytic capacitor	16RE2-22-T2-T	3		N/A	C	A
	28071091	Electrolytic capacitor	6.3RE2-100-T2-T	3		N/A	C	A
	28071121	Electrolytic capacitor	10RE2-220-T2-T	3		N/A	C	A
	28071180	Electrolytic capacitor	10RE2-47-T2-T	4		N/A	C	A
	28076035	Electrolytic capacitor	50RE2-R33-T2-T	4		N/A	C	A
	28130560	Semi conductive capacitor	DD408SR104K16-T	8		N/A	C	A
	28130679	Semi conductive capacitor	DD4 .7SR563K16-T	1		N/A	C	A
	28130826	Ceramic capacitor	DD003F103Z50-T	5		N/A	C	A
	28130882	Ceramic capacitor	DD003B221K50-T	9		N/A	C	A
	28183682	Ceramic capacitor	RT-HE70TKCH820J-T	2		N/A	C	A
	28190379	Ceramic capacitor	RT-HE40TKYB151K-T	1		N/A	C	A
	28195125	Semi conductive capacitor	DD404SR102K25-T	2		N/A	C	A
	28195168	Semi conductive capacitor	DD404SR822K25-T	2		N/A	C	A
	28195362	Semi conductive capacitor	DD406SR473K16-T	3		N/A	C	A
☆	28250098	TF capacitor	ECQ-M1H473KF3-T	1		N/A	C	A
	28250273	TF capacitor	ECQ-M1H681KF3-T	1		N/A	C	A
	28450196	Three polarity capacitor	DS310-76D223S	2		AC	C	B
	30202147	Ferrite beads	BL02RN2-R62	3		AB	C	A
☆	35013731	DC jack	HEC2305-01-250	1		AC	B	A
	38410007	Coil	L10P-7L	1		AC	C	A
☆	43170510	Blank PCB M3128-MA1M	M110440-1	1		N/A	X	B
	2) M3128-CN1M PCB ASS'Y							
	23010097	Diode	1S2473-T-77-T	9		AA	C	A
	2370070	LED	LN275RPX-(TT2)	1		AC	B	A
	26140200	Carbon film resistor	R-25-560-J-T24-T	1		N/A	C	A
	26140234	Carbon film resistor	R-25-1K-J-T24-T	2		N/A	C	A
	26140277	Carbon film resistor	R-25-2.2K-J-T24-T	1		N/A	C	A
	26140498	Carbon film resistor	R-25-4.7K-J-T24-T	1		N/A	C	A

Notes: ☆ — New parts
Q'ty — Quantity used per unit
* — The minimum order and supply quantity

Rank A: Essential
B: Stock recommended
C: Others
X: No stock recommended

SK-2 Parts List

Item	Code No.	Parts Name	Specification	Q'ty		Price Code	RANK	
	26140501	Carbon film resistor	R-25-2.7K-J-T24-T	1		N/A	C	A
☆	37251806	PC joiner M128B	JSF00-22-80M	1		AD	B	A
☆	43170520	Blank PCB M3128-CN1M	M110439-1	1		N/A	X	C
	3) M3129-KY1M PCB ASS'Y							
	23010241	Diode	1SS254T-77-T	32		AA	C	A
☆	37251813	PC joiner M128A	JSF00-12-145M	1		AD	B	A
	43075041	Blank PCB M3129-KY1M	M21332A-1	1		N/A	X	B
	4) UPPER CASE ASS'Y							
☆ 1	38310343	Speaker	KC08080	2		AK	B	C
2	69097380	SL contact 9D	CSB-09D	2		AD	B	A
☆ 3	69164780	Button 128 SET	M310757*1	1		AH	C	B
☆ 4	69164790	Slide knob 128	M310702-1	2		AB	C	A
☆ 5	69164800	CN rubber 128-1	M410832-1	1		AB	B	A
☆ 6	69164810	CN rubber 128-6	M410831-1	2		AD	B	A
☆ 7	69164820	CN rubber 128-3	M410831-2	2		AC	B	A
☆ 8	69164830	Rubber button 128	M410826-1	1		AD	C	A
☆ 9	69070152	White key set NM	M1843B-1	1		AH	C	B
10	69070162	Black key set NM	M1844B-1	1		AH	C	B
11	69070300	Contact rubber NM	M31953-1	1		AF	B	B
☆ 12	69164840	Upper case sub ass'y	M210563*1	1		AX	C	G
☆ 13	69164850	Key blind 128	M210497-1	1		AH	X	B
	5) MIC 128 ASS'Y							
14	38309021	Condensor MIC	WM-034CY	1		AE	B	E
15	69070321	Sponge 129	M42612A-1	1		N/A	X	A
	6) LOWER CASE ASS'Y							
16	69058344	Battery cover sub ass'y	M31417D*8	1		AC	C	A
☆ 17	69164640	Lower case sub ass'y	M210560*1	1		AV	C	F
18	63452238	Battery spring A-G55	A42606B-1	1		AA	C	A
19	69026690	Rubber foot	M41361-1	5		AA	C	A
☆ 20	69164770	Battery spring 120	M410515-1	1		AA	C	A

Notes: ☆ — New parts
Q'ty — Quantity used per unit

Rank A: Essential
B: Stock recommended
C: Others
X: No stock recommended

SK-2 Parts List

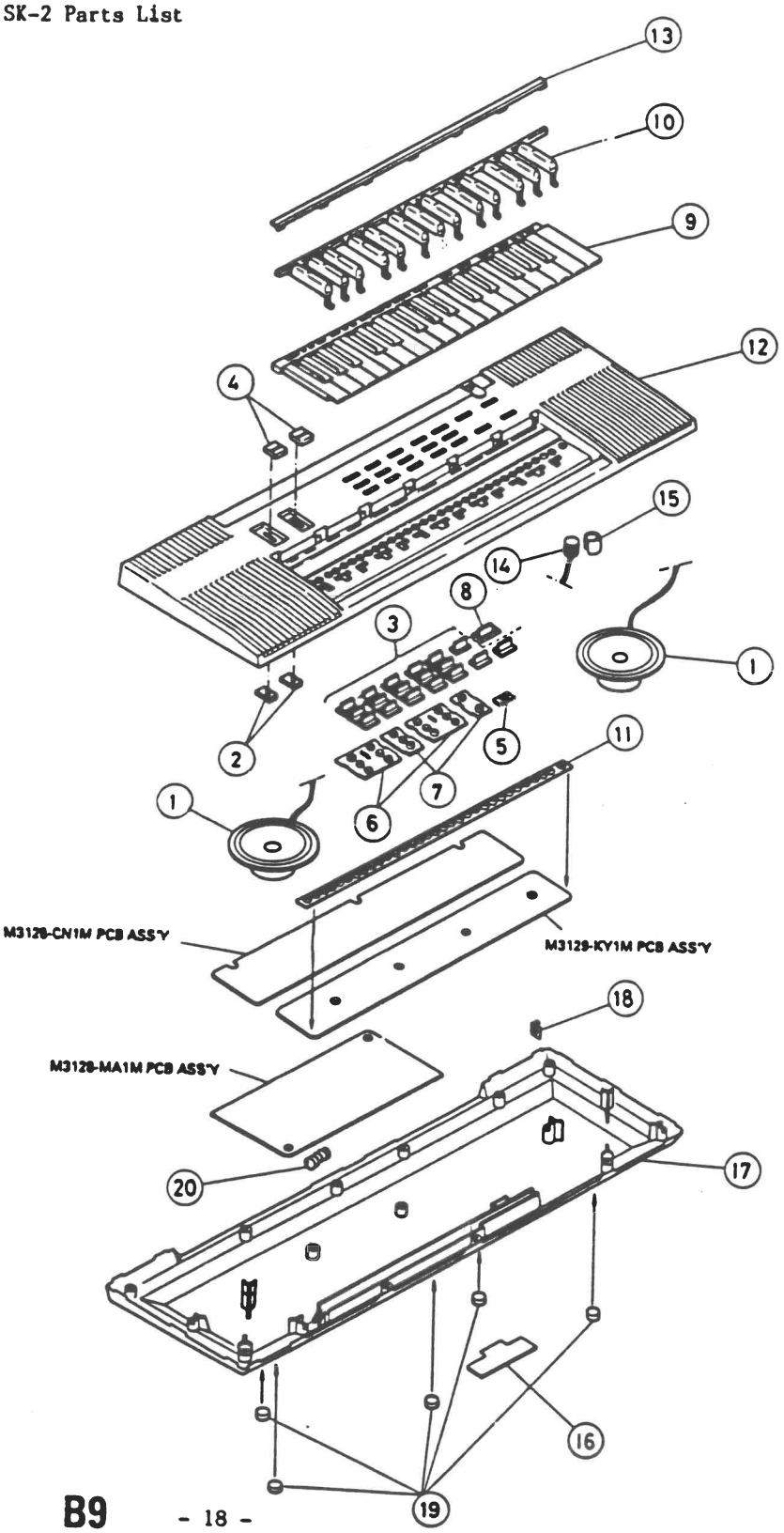

1. SCHEMATIC DIAGRAM

1-1. Main PCB M3128-MA1M

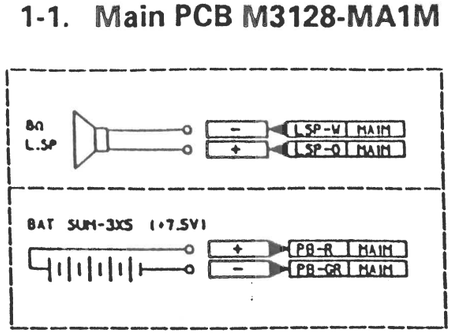

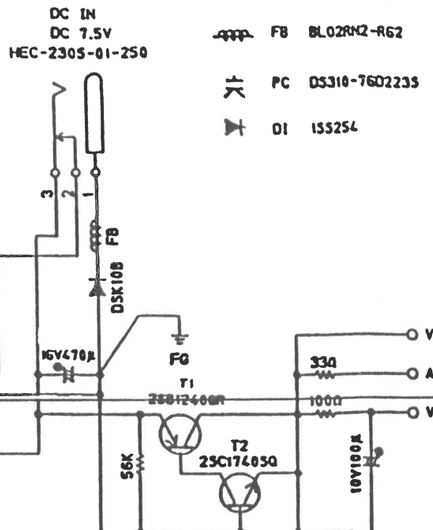

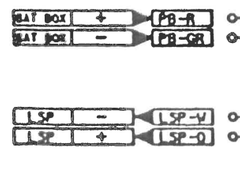

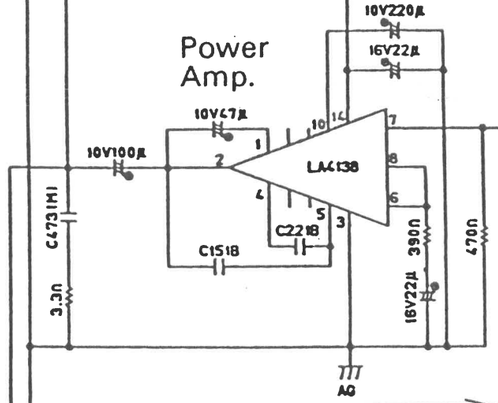

VCC = + 7.5 V
VDD = + 5.0 v
AVDD = + 5.0 v
VC = + 5.0 V
DG1 = GND
DG2 = GND
DG3 = GND
AG = GND

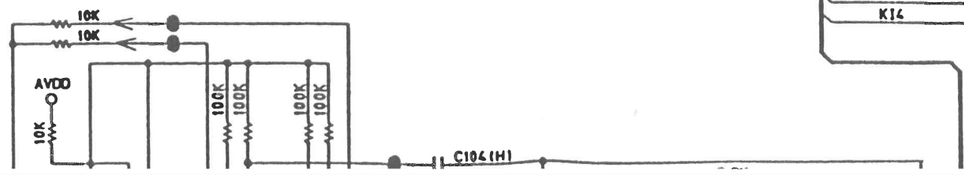

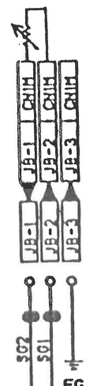

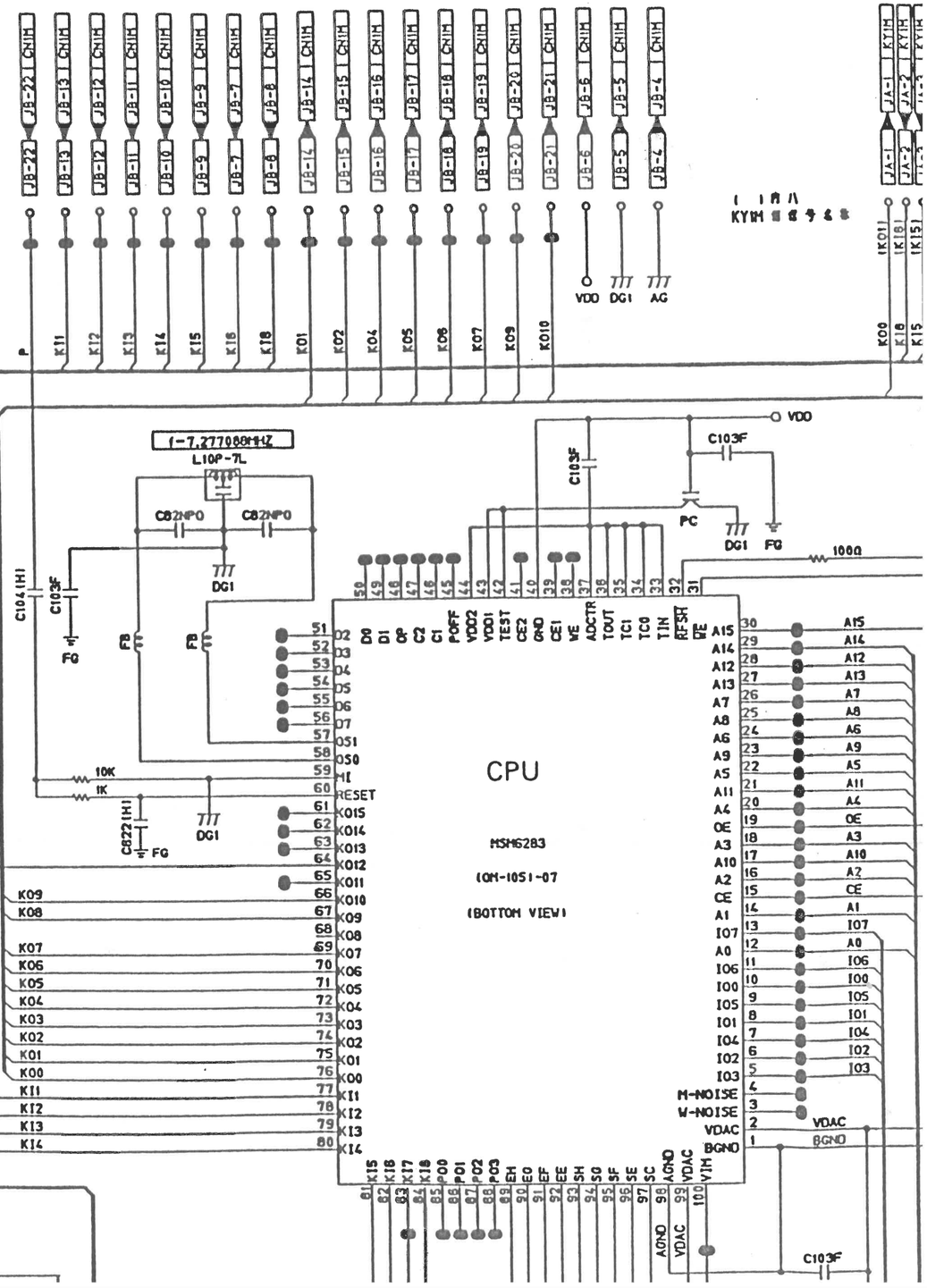

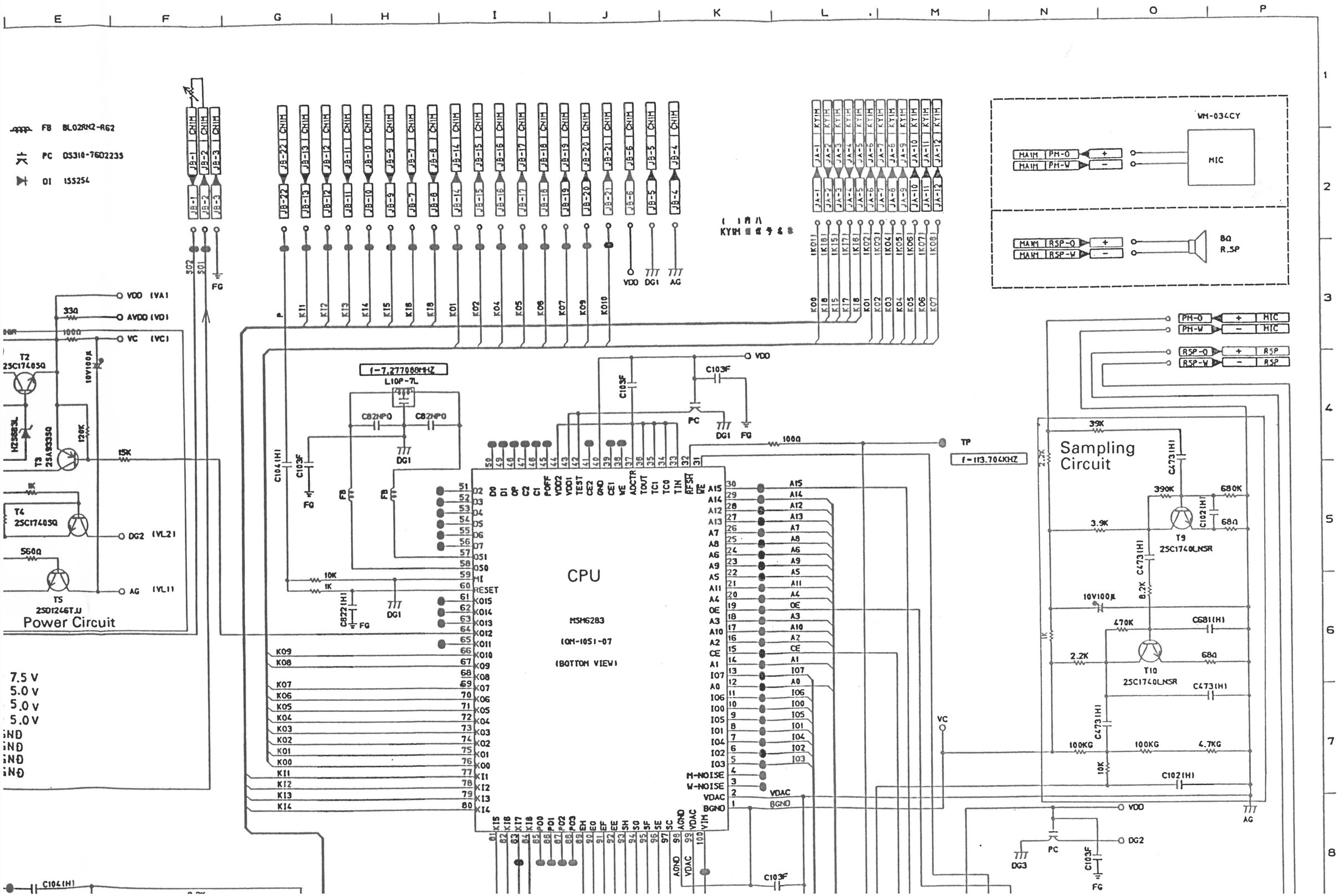

FB BL02RN2-R62
PC DS310-76D223S
DI 1SS254
CPU
MSM6283
(QM-1051-07
(BOTTOM VIEW)
Power Circuit
Sampling Circuit
WM-034CY
MIC
8Ω
R.SP
f=113.704KHZ
f=7.277088MHZ
L10P-7L
T2
2SC1740SQ
T3
2SA933SQ
T4
2SC1740SQ
T5
2SD1246T.U
T9
2SC1740LNSR
T10
2SC1740LNSR
VDD (VA)
AVDD (VD)
VC (VC)
DG2 (VL2)
AG (VL1)
7.5 V
5.0 V
5.0 V
5.0 V

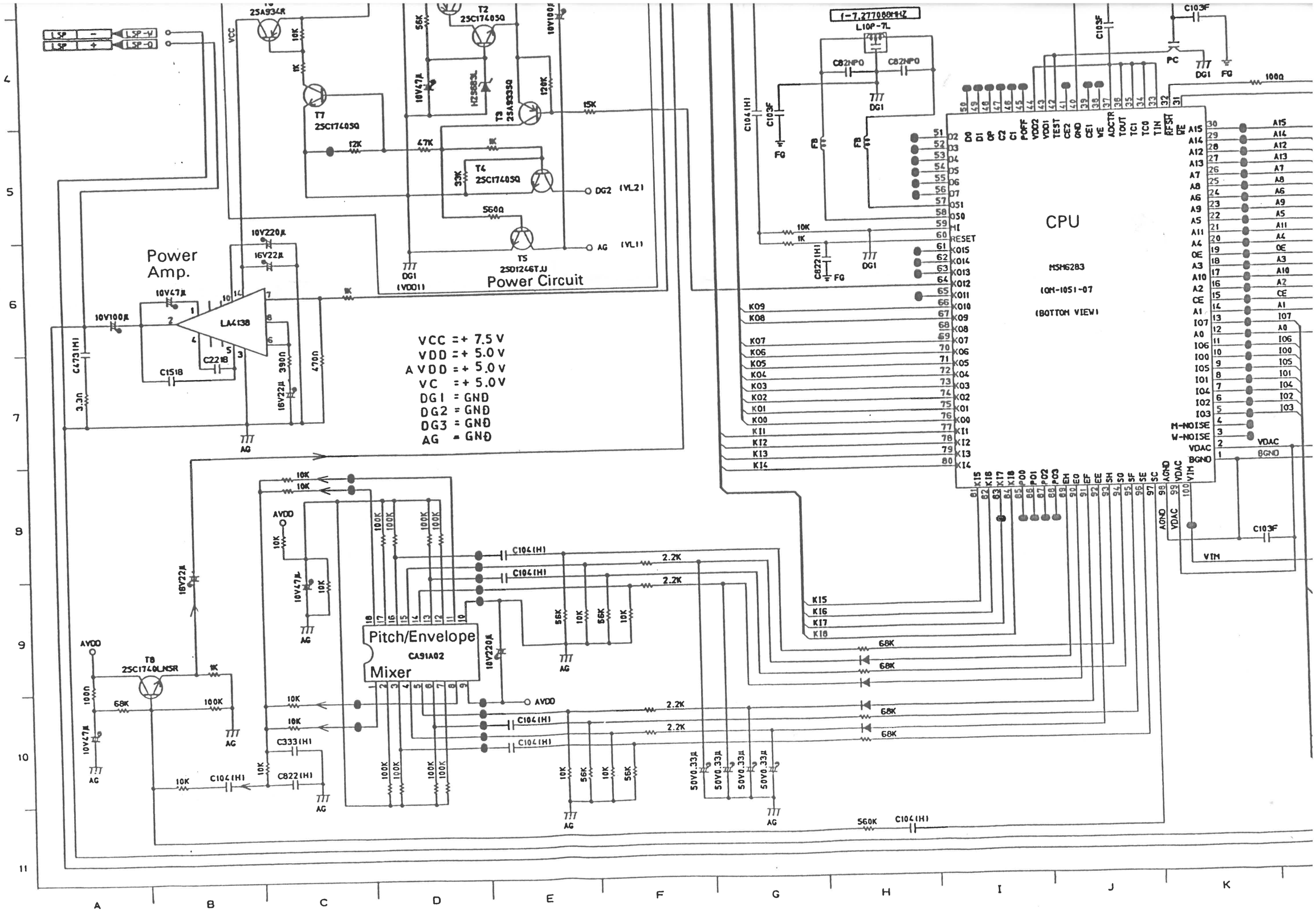

Power Amp.
LA4138
Power Circuit
T2 2SC1740SQ
T3 2SA933SQ
T4 2SC1740SQ
T5 2SD1246T.U
T7 2SC1740SQ
T8 2SC1740LNSR
VCC = + 7.5 V
VDD = + 5.0 V
AVDD = + 5.0 V
VC = + 5.0 V
DG1 = GND
DG2 = GND
DG3 = GND
AG = GND
CPU
MSM6283
(QM-1051-07)
(BOTTOM VIEW)
Pitch/Envelope
CA91A02
Mixer
L10P-7L

Power Circuit

CPU

MSM6283

(QM-1051-07

(BOTTOM VIEW)

Sampling Circuit

RAM

ROM

7.5 V
5.0 v
5.0 v
5.0 v
GND
GND
GND
GND

1-2. Console PCB M3128

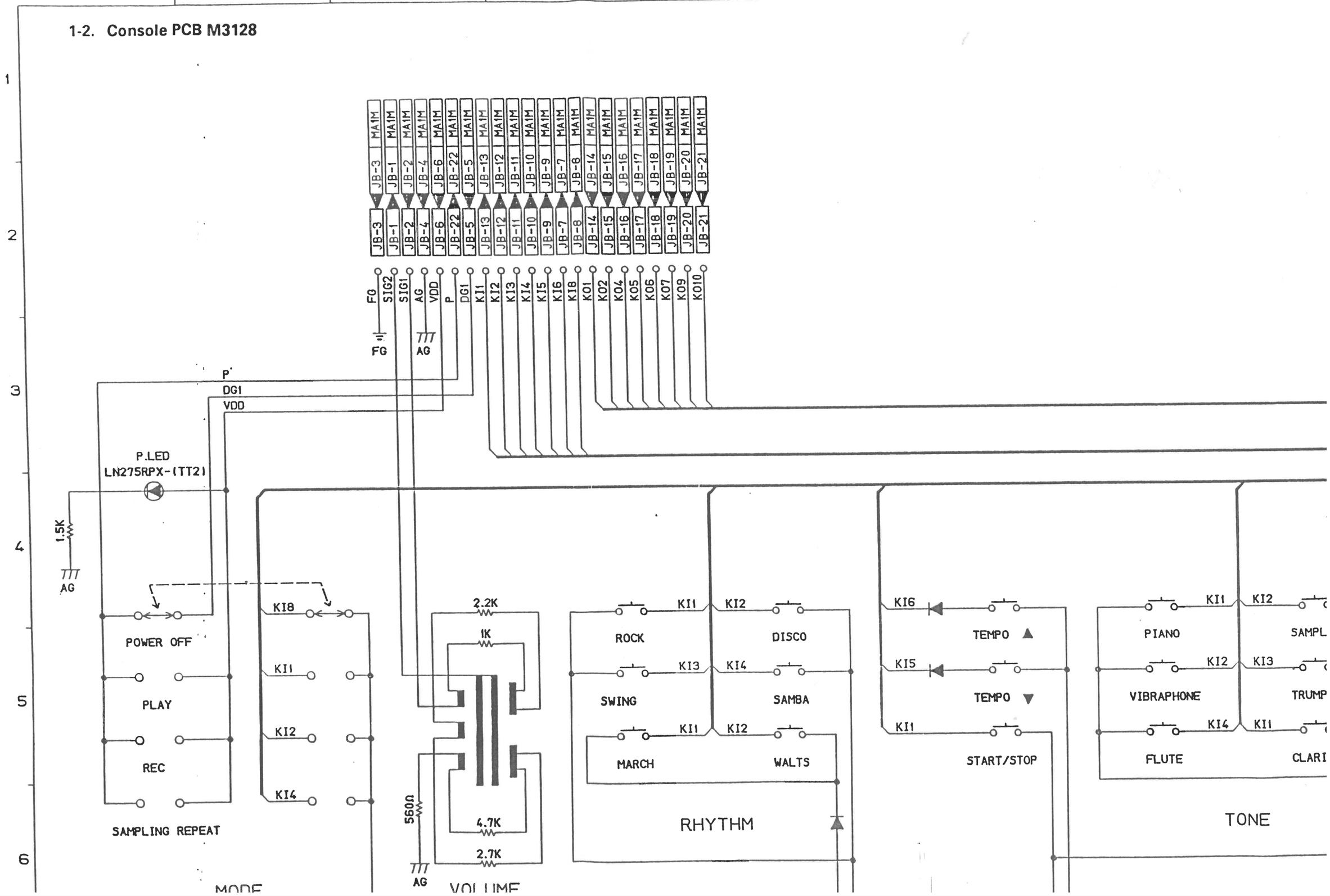

D E F G H I J K

1 2 3 4 5 6

JB-13 MAIM
JB-12 MAIM
JB-11 MAIM
JB-10 MAIM
JB-9 MAIM
JB-7 MAIM
JB-8 MAIM
JB-14 MAIM
JB-15 MAIM
JB-16 MAIM
JB-17 MAIM
JB-18 MAIM
JB-19 MAIM
JB-20 MAIM
JB-21 MAIM

JB-13
JB-12
JB-11
JB-10
JB-9
JB-7
JB-8
JB-14
JB-15
JB-16
JB-17
JB-18
JB-19
JB-20
JB-21

K12 K13 K14 K15 K16 K18 K01 K02 K04 K05 K06 K07 K09 K010

.2K
1K
.7K
.7K
.UME

KI1 KI2
ROCK DISCO
KI3 KI4
SWING SAMBA
KI1 KI2
MARCH WALTS
RHYTHM

KI6
TEMPO ▲
KI5
TEMPO ▼
KI1
START/STOP

KI1 KI2
PIANO SAMPLING
KI2 KI3
VIBRAPHONE TRUMPET
KI4 KI1
FLUTE CLARINET
TONE

KI4 KI1
SAMPLING EFFECT SAMPLING
KI2 KI2
MEMORY START DEMO

FG
AG
P
DG1
VDD
P.LED
LN275RPX-(TT2)
1.5K
AG
POWER OFF
PLAY
REC
SAMPLING REPEAT
KI8
KI1
KI2
KI4
MODE
2.2K
1K
560Ω
4.7K
2.7K
AG
VOLUME
KI1
KI2
ROCK
DISCO
KI3
KI4
SWING
SAMBA
KI1
KI2
MARCH
WALTS
RHYTHM
KO9
KO7
KO6
KI6
TEMPO ▲
KI5
TEMPO ▼
KI1
START/STOP
KI1
KI2
PIANO
SAMI
KI2
KI3
VIBRAPHONE
TRUI
KI4
KI1
FLUTE
CLAI
TONE
KO4
KO10
3
4
5
6
7
8
A
B
C
D
E
F
G
H

KI2 KI3 KI4 KI5 KI6 KI8 K01 K02 K04 K05 K06 K07 K09 K010

.2K

1K

4.7K

2.7K

LUME

KI1 KI2

ROCK DISCO

KI3 KI4

SWING SAMBA

KI1 KI2

MARCH WALTS

RHYTHM

KI6

TEMPO ▲

KI5

TEMPO ▼

KI1

START/STOP

KI1 KI2

PIANO SAMPLING

KI2 KI3

VIBRAPHONE TRUMPET

KI4 KI1

FLUTE CLARINET

TONE

KI4 KI1

SAMPLING EFFECT SAMPLING

KI2 KI2

MEMORY START DEMO

K07 K06

K04 K010

K02 K01

K05

3 4 5 6 7 8

D E F G H I J K

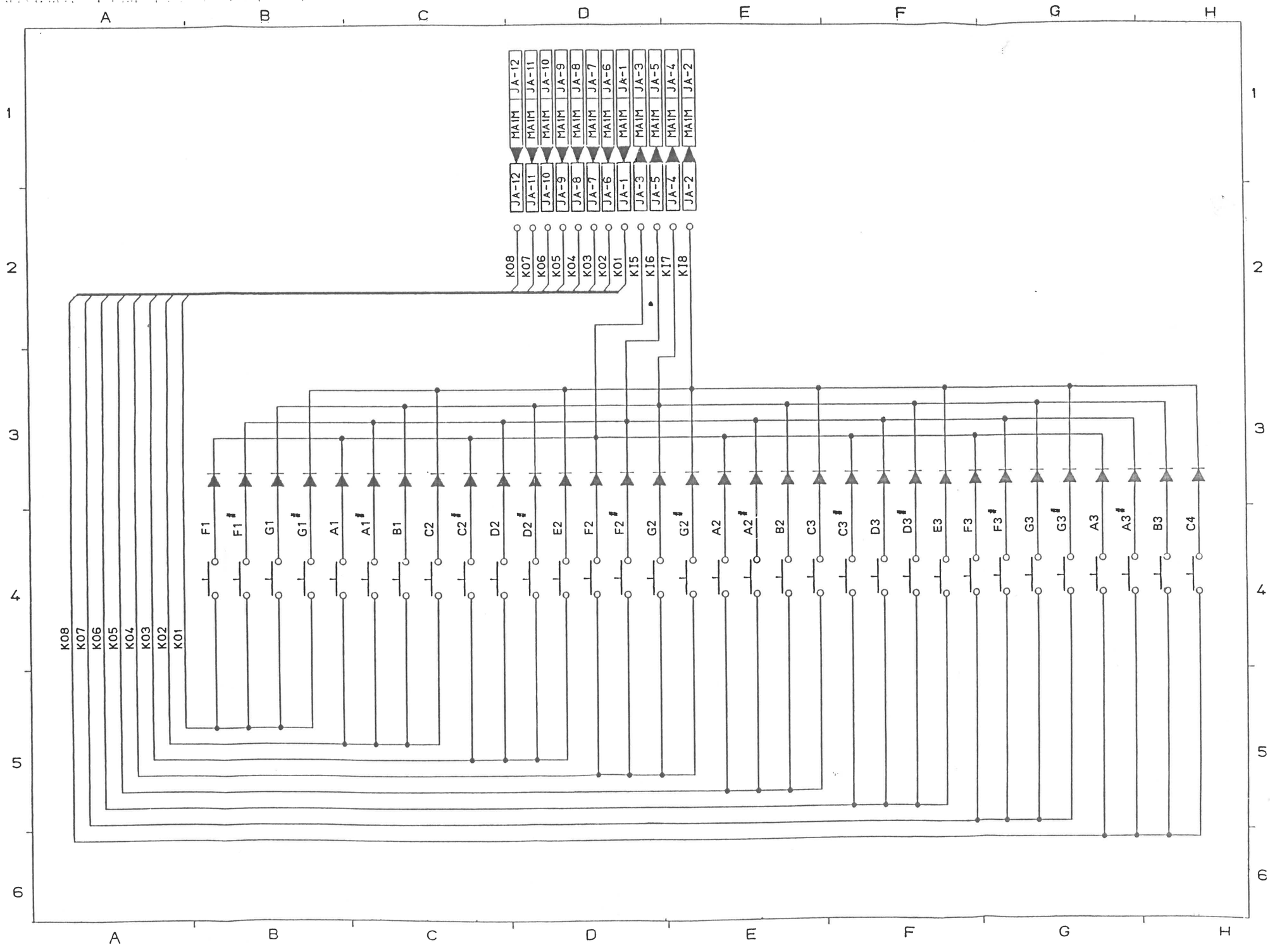
A
B
C
D
E
F
G
H
1
2
3
4
5
6
MAIM JA-12
MAIM JA-11
MAIM JA-10
MAIM JA-9
MAIM JA-8
MAIM JA-7
MAIM JA-6
MAIM JA-1
MAIM JA-3
MAIM JA-5
MAIM JA-4
MAIM JA-2
JA-12
JA-11
JA-10
JA-9
JA-8
JA-7
JA-6
JA-1
JA-3
JA-5
JA-4
JA-2
K08
K07
K06
K05
K04
K03
K02
K01
K15
K16
K17
K18
F1
F1'
G1
G1'
A1
A1'
B1
C2
C2'
D2
D2'
E2
F2
F2'
G2
G2'
A2
A2'
B2
C3
C3'
D3
D3'
E3
F3
F3'
G3
G3'
A3
A3'
B3
C4